Instructions - Parts

Feed Pump Kits

309815T
EN

For supplying polyurethane materials from 55 gal. (200 liter) drums to Reactor™ proportioning systems.

For professional use only. Not for use explosive atmospheres.

Important Safety Instructions
Read all warnings and instructions in this manual.
Save these instructions.

See page 2 for a list of feed pump kits.

246655 Feed Pump Package shown installed in Reactor proportioning system. Some parts shown are not included in kit.

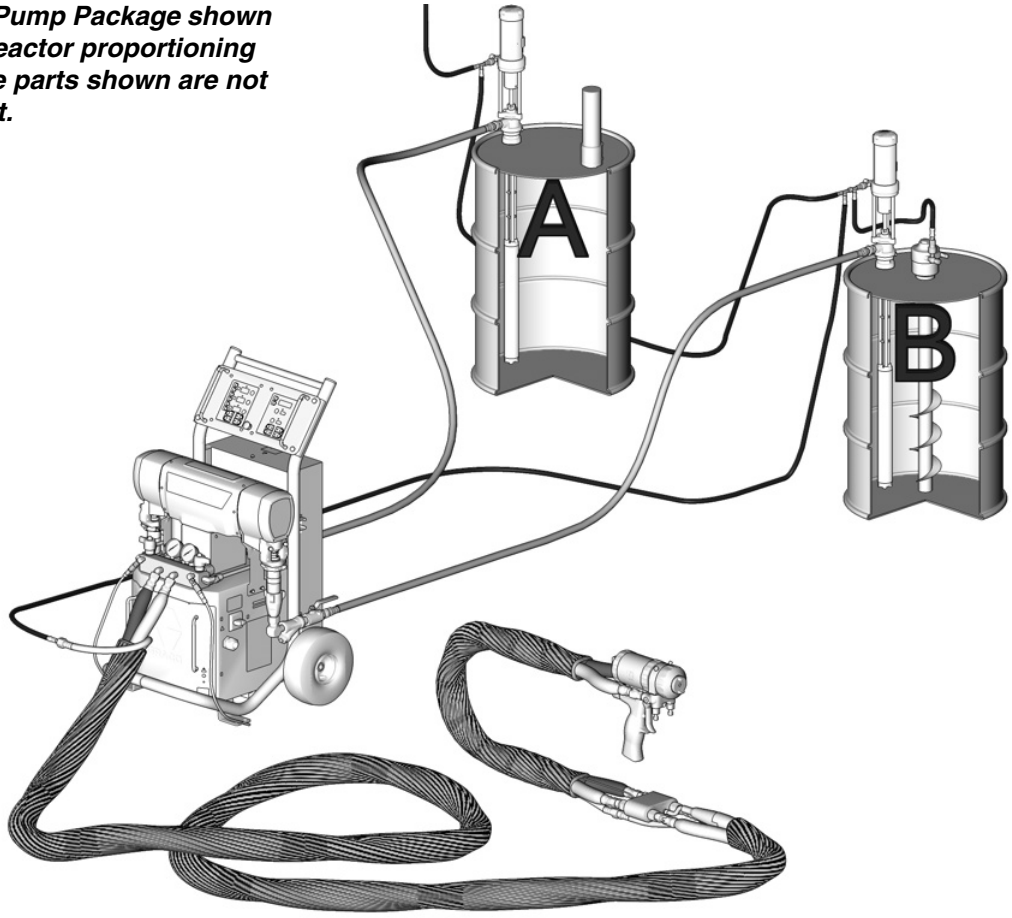

TI7690A

Contents

Feed Pump Kits 2
Related Manuals 3
Manual Conventions 3
Installation 5
Husky 1050 Wall Mount 9
Standard 2:1 Kit 9
Operation 10
Startup 10
Shutdown 10
Changing Drums 10
Maintenance 10
Parts 11
Complete Feed Pump Packages 11
Fluid Supply Kits 13
Pump Kits 14
246419 Riser Tube Kit 16
Technical Data 17
Graco Standard Warranty 18
Graco Information 18

Feed Pump Kits

Complete Package (fluid and air)	Pump Kit (1 pump and riser tube)	Pump Model	Maximum Air Input Pressure	Maximum Fluid Working Pressure
246369	246366	Husky™ 515	100 psi (0.7 MPa, 7 bar)	100 psi (0.7 MPa, 7 bar)
246375	246367	Husky™ 716	100 psi (0.7 MPa, 7 bar)	100 psi (0.7 MPa, 7 bar)
246376	246368	Husky™ 1050	125 psi (0.86 MPa, 8.6 bar)	125 psi (0.86 MPa, 8.6 bar)
246655	246654	Triton™ 308	115 psi (0.8 MPa, 8 bar)	115 psi (0.8 MPa, 8 bar)
246081	246898	T2 2:1 Ratio	180 psi (1.2 MPa, 12.5 bar)	405 psi (2.8 MPa, 28 bar)
247955	247956	T1 2:1 Ratio	180 psi (1.2 MPa, 12.5 bar)	360 psi (2.5 MPa, 25 bar)
24Z987	24Z988	T3 3:1 Ratio	100 psi (0.69 MPa, 6.9 bar)	315 psi (2.17 MPa, 21.7 bar)
25D295	25D296	T3 CS 3:1 Ratio	100 psi (0.69 MPa, 6.9 bar)	315 psi (2.17 MPa, 21.7 bar)

Related Manuals

The following manuals are shipped with feed pump kits. Refer to these manuals for detailed equipment information.

Feed Pumps	
Part No.	**Description**
308981	Husky 515 Pump
308981	Husky 716 Pump
312877	Husky 1050 Pump Operation
313435	Husky 1050 Pump Repair-Parts
309303	Triton 308 Pump
311882	T2 2:1 Ratio Pump
312766	T1 2:1 Ratio Pump
3A5180	T3 3:1 Ratio Pump

The following manuals are shipped with Reactor™. Refer to these manuals for detailed equipment information.

Reactor Electric Proportioner	
Part No.	**Description**
312065	Reactor Electric Proportioner, Operation Manual (English)
312066	Reactor Electric Proportioner, Repair-Parts Manual (English)
312062	Reactor Hydraulic Proportioner, Operation Manual (English)
312063	Reactor Hydraulic Proportioner, Repair-Parts Manual (English)

The following manual is shipped with Fusion™ spray gun. Refer to this manual for detailed equipment information.

Fusion Spray Gun	
Part No.	**Description**
309550	Instruction Manual (English)

Manual Conventions

Warning

⚠ WARNING

A warning alerts you to possible serious injury or death if you do not follow instructions.

Symbols, such as fire, explosion, and electric shock (shown), alert you to a specific hazard and direct you to read the indicated hazard warnings on pages 4-4.

Caution

⚠ CAUTION

A caution alerts you to possible equipment damage or destruction if you do not follow instructions.

⚠ WARNING

FIRE, EXPLOSION, AND ELECTRIC SHOCK HAZARD

Solvent and fumes in work area can ignite or explode. To help prevent fire and explosion:

- Use equipment only in well ventilated area.
- Eliminate all ignition sources, such as pilot lights, cigarettes and plastic drop cloths (potential static arc).
- Do not plug or unplug power cords or turn lights on or off when flammable fumes are present.
- Keep the work area free of debris, including solvent, rags, and gasoline.
- Ground equipment and conductive objects. See **Ground system.**, page 6.
- Hold gun firmly to side of grounded pail when triggering into pail.
- Use only grounded hoses.
- If there is static sparking or you feel a shock, **stop operation immediately.** Do not use equipment until you identify and correct the problem.
- To avoid chemical reaction and explosion, do not use 1,1,1-trichloroethane, methylene chloride, other halogenated hydrocarbon solvents or fluids containing such solvents in pressurized aluminum equipment.

EQUIPMENT MISUSE HAZARD

Misuse can cause serious injury or death.

- For professional use only.
- Use equipment only for its intended purpose. Call your Graco distributor for information.
- Read manuals, warnings, tags, and labels before operating equipment. Follow instructions.
- Check equipment daily. Repair or replace worn or damaged parts immediately.
- Do not alter or modify equipment. Use only Graco parts and accessories.
- Do not exceed the maximum working pressure or temperature rating of the lowest rated system component. See **Technical Data** in all equipment manuals.
- Use fluids and solvents that are compatible with equipment wetted parts. See **Technical Data** in all equipment manuals. Read fluid and solvent manufacturer's warnings.
- Route hoses and cables away from traffic areas, sharp edges, moving parts, and hot surfaces.
- Do not use hoses to pull equipment.
- Comply with all applicable safety regulations.

BURN HAZARD

This equipment is used with heated fluid, which can cause equipment surfaces to become very hot. To avoid severe burns:

- Do not touch hot fluid or equipment.
- Allow equipment to cool completely before touching it.
- Wear gloves if fluid temperature exceeds 110°F (43°C).

TOXIC FLUID OR FUMES HAZARD

Toxic fluids or fumes can cause serious injury or death if splashed in the eyes or on skin, inhaled, or swallowed.

- Read Material Safety Data Sheet (MSDS) to know the specific hazards of the fluids you are using.
- Store hazardous fluid in approved containers, and dispose of it according to applicable guidelines.

PERSONAL PROTECTIVE EQUIPMENT

You must wear proper protective equipment when operating, servicing, or when in the operating area of the equipment to help protect you from serious injury, including eye injury; inhalation of toxic fumes; and hearing loss. This equipment includes but is not limited to:

- Protective eyewear.
- Gloves, clothing, and respirator as recommended by the fluid and solvent manufacturer.
- Hearing protection.

Installation

NOTE: For Husky 1050 Wall Mount Kit 246368, see page 9.

NOTE: For Standard 2:1 Kit 246081, see page 9.

1. Flush pumps before using.

NOTE: Feed pumps are tested with oil. Flush out oil with a compatible solvent before spraying. See **Flushing** in Reactor operation manual.

⚠ WARNING

Read warnings, page 4. Flush equipment only in a well-ventilated area. Do not spray flammable fluids. Do not turn on heaters while flushing with flammable solvents.

2. Keep A and B components separate

⚠ CAUTION

To prevent cross-contamination of fluid, mark A component (ISO) pumps, hoses, and connections with red tape. Mark B component (RES) pumps, hoses, and connections with blue tape. Do not interchange or cross-connect A component and B component parts.

3. Position drums. Place A (ISO) and component B (RES) drums as desired. Air hose (C) connecting feed pumps is 15 ft (4.57 m) long. See FIG. 1.

4. Install pump kit (101).

   a. Inspect bung o-ring (309) and gasket (303) in place. If either is worn or damaged, or if ISO shows signs of crystallization, replace. See page 16.

   b. Remove elbow and 2 in. bushing supplied with desiccant dryer (6). Screw dryer 3/4 npt fitting into vent of A component (ISO) drum.

⚠ CAUTION

Lubricate bung o-ring (309) with 217374 ISO Pump Oil each time you change drums. This keeps air and moisture from reacting with isocyanate and allows bung adapter to rotate freely.

   c. Open drum bung hole.

⚠ CAUTION

Tighten pump clamps and external fasteners before first use. See pump manual.

   d. Place riser tube into drum. Tighten bung adapter (304) securely.

5. Connect fluid supply kit.

   a. Install swivel union (102) in pump fluid outlet. *Triton 308 only:* Install 90° elbow (104) in pump outlet, then install swivel union (102) in elbow.

3 Used on Triton 308 packages only.

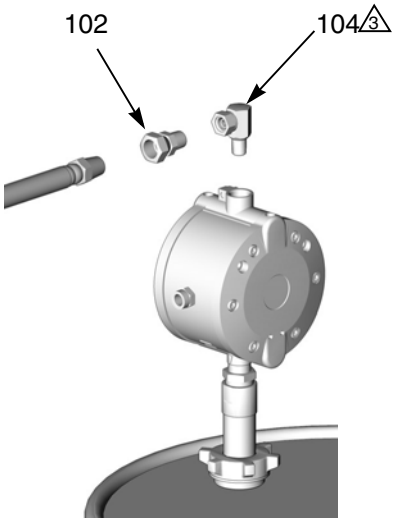

   b. Connect hose (103) between swivel union (102) and Reactor swivel inlet (D). See FIG. 1.

6. Install air supply kit (2).

   a. Supply clean, dry, filtered air to feed pumps.

   b. See manual 309827 to install air supply kit.

7. Ground system.

WARNING

Read warnings, page 4.

   a. *Feed pump:* follow instructions in separate feed pump manual, supplied.

   b. *Reactor:* see Reactor operation manual.

   c. *Spray gun:* see gun manual.

   d. *Fluid supply containers:* follow your local code.

   e. *Object being sprayed:* follow your local code.

   f. *Solvent pails used when flushing:* follow your local code. Use only metal pails, which are conductive, placed on a grounded surface. Do not place pail on a nonconductive surface, such as paper or cardboard, which interrupts grounding continuity.

   g. *To maintain grounding continuity when flushing or relieving pressure,* hold a metal part of spray gun firmly to the side of a grounded *metal* pail, then trigger gun.

Installation

246655 Package shown installed in Reactor proportioning system. Includes * parts only.

NOTE: System shown includes 246978 Circulation Kit, available separately, which includes two 247616 desiccant dryers (6).

△2 Air Supply Kit. See 309827.

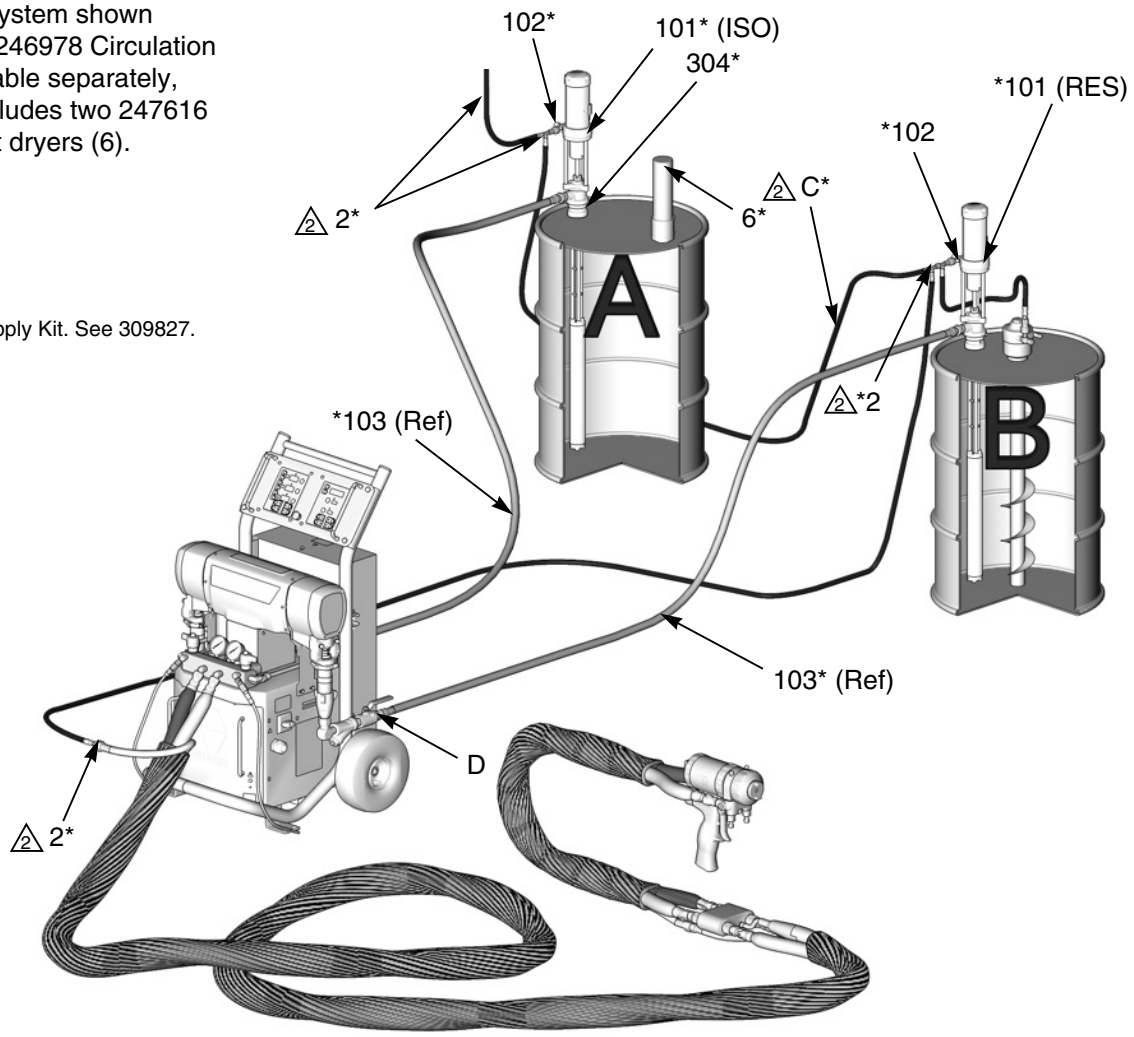

TI7690A

FIG. 1. Installation

Installation with Circulation (T3 Pumps)

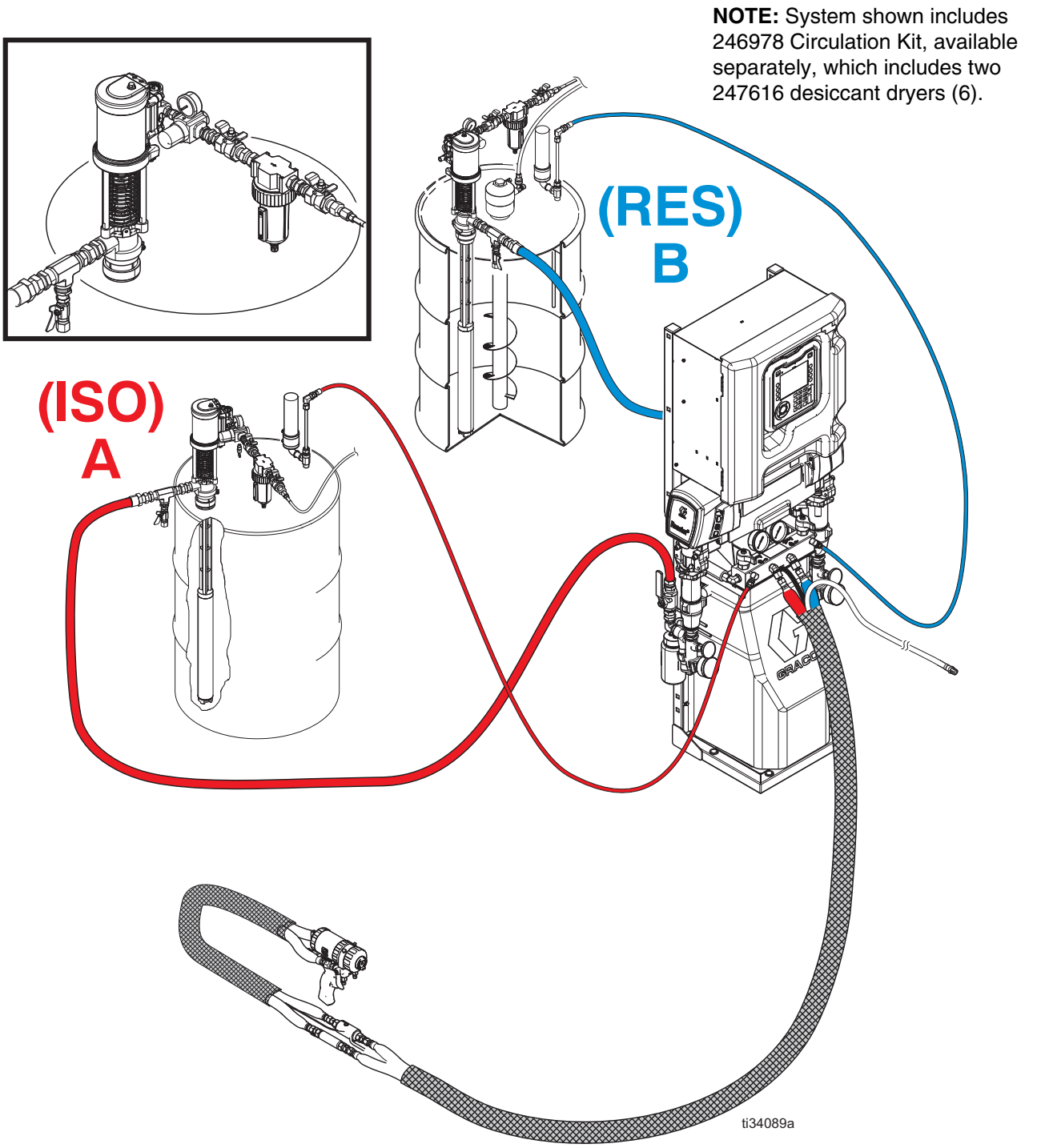

FIG. 2.

Husky 1050 Wall Mount

1. Be sure wall can support weight of pump, hoses, and accessories, and can withstand stress during operation.
2. Position wall bracket (204) no more than 5 ft (1.52 m) above floor. Check that bracket is level. Attach to wall, using screws long enough to keep bracket from vibrating. See FIG. 3.
3. Connect swivel union (205) to pump inlet.
4. Install bushing (3) in pump air inlet.
5. Install pump (201) on bracket (204) securely, using provided dampeners, washers, and lock nuts.
6. Connect elbow (206) to top of riser tube kit (202).
7. Connect suction hose (203) to elbow (206) and inlet swivel (205).
8. Follow steps 1-7, pages 5-6, to finish installation.

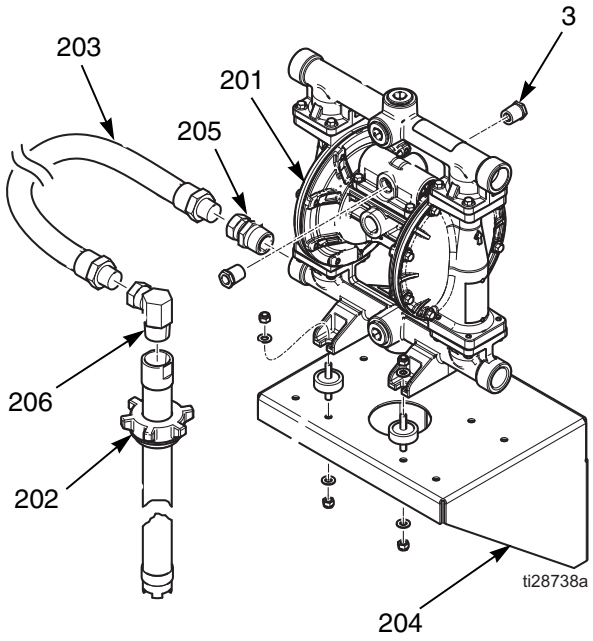

FIG. 3. Husky 1050 Wall Mount

Standard 2:1 Kit

1. Follow steps 1-3, page 5.
2. Open drum bung hole. Screw bung adapter with gasket into bung hole. See pump manual 311882.
3. Install swivel fitting (1c) in pump fluid outlet. See FIG. 4.
4. Connect hose (1b) between swivel fitting (1c) and Reactor swivel inlet (D, see FIG. 1).
5. Remove elbow and 2 in. bushing supplied with desiccant dryer (6, see FIG. 1). Screw dryer 3/4 npt fitting into vent of A component (ISO) drum.
6. Follow steps 6-7, page 6, to finish installation.

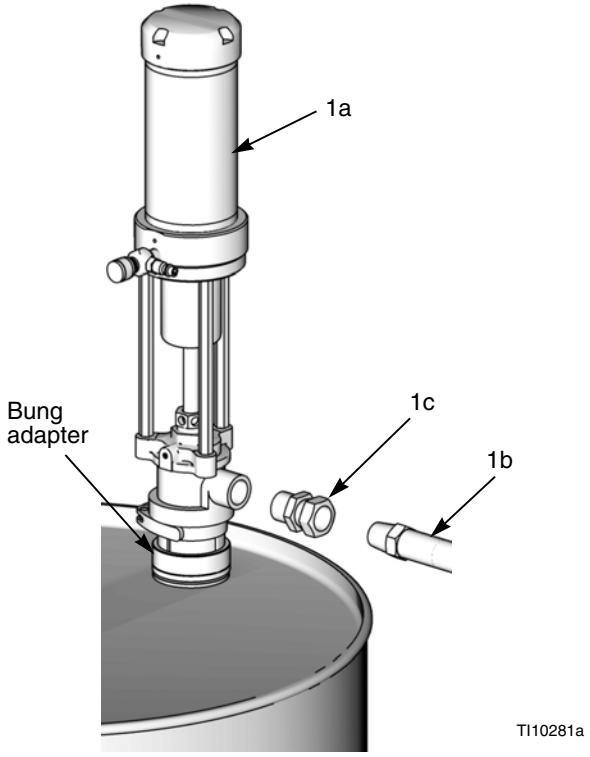

FIG. 4. Standard 2:1 Kit

Operation

Startup

1. See **Load fluid with feed pumps** in Reactor operation manual.
2. Open feed pump air regulator.
3. Open feed pump bleed-type master air valve.
4. Adjust air to feed pump with needle valve.

   NOTE: Cold, viscous material may be difficult to prime. Use needle valve to reduce air flow to motor.

   NOTE: Do not plug or shut off pump fluid outlet when priming. Fluid must be free to flow through pump to prime.

   NOTE: To increase pump flow rate and reduce icing, remove pump muffler. This will increase exhaust noise.
5. Never let pump run when drum is empty. A dry pump can accelerate and damage itself. If pump is running too fast, stop it immediately. Check and refill fluid supply, or flush with compatible solvent. Always prime entire system to remove any air. Do not let material harden in pump.

Shutdown

See **Shutdown** and **Pressure Relief Procedure** in Reactor manual. Close feed pump bleed-type master air valve.

Changing Drums

⚠ CAUTION

To prevent cross-contamination of fluid when changing drums, complete changing one component before changing second component.

1. See **Shutdown**.
2. Remove riser tube from drum. Install in new drum. See **Installation**, page 5.
3. Lubricate bung o-ring (309), page 5.
4. See **Load fluid with feed pumps** in Reactor operation manual.

Maintenance

NOTE: See supplied pump manual for maintenance, repair, and parts information.

Lubricate bung o-ring (309) with 217374 ISO Pump Oil each time you change drums. This keeps air and moisture from reacting with ISO.

Whenever pump is removed from drum, inspect bung o-ring (309) and gasket (303) in place. If either is worn or damaged, or if ISO shows signs of crystallization, replace. See page 16.

Tighten pump clamps and external fasteners periodically. See pump manual.

Parts

Complete Feed Pump Packages

Part No. 246369, Husky 515 Package

Part No. 246375, Husky 716 Package

Part No. 246376, Husky 1050 Package

Part No. 246655, Triton 308 Package (shown)

Ref.	Part	Description	Qty.
1	246481	FLUID SUPPLY KIT, Husky 515	1
	246482	FLUID SUPPLY KIT, Husky 716	1
	246676	FLUID SUPPLY KIT, Husky 1050	1
	246677	FLUID SUPPLY KIT, Triton 308	1
2	246483	AIR SUPPLY KIT; see 309827	1
3	100206	BUSHING, air inlet; 1/2 npt(m) x 1/4 npt(f); 246376 only; see page 15 for location	2
6	247616	KIT, desiccant dryer; for ISO side	1
7	104969	BUSHING, reducer; 1/2npt(m) x 3/4 npt(f); use on 1/2 in. ISO inlet hose (not shown)	1

246655 Package shown installed in Reactor proportioning system. Includes * parts only.

NOTE: System shown includes 246978 Circulation Kit, available separately, which includes two 247616 desiccant dryers (6).

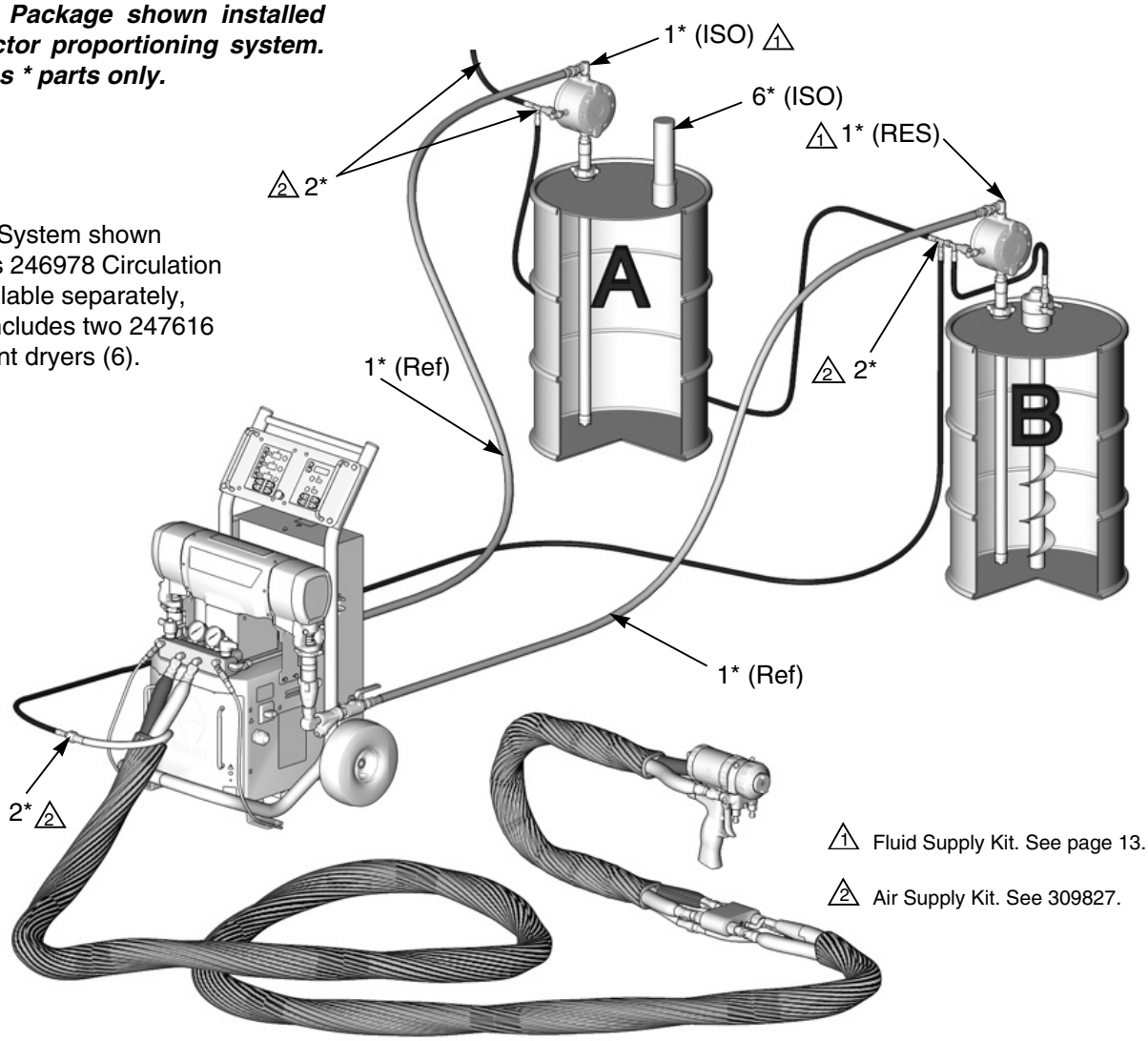

TI7690A

Part No. 246081, T2 2:1 Package

Ref.	Part	Description	Qty.
1	246898	KIT, fluid supply	1
1a	295616	PUMP, 2:1; see 311882	2
1b	217382	HOSE, fluid; 3/4 npt (mbe); 3/4 in. (19 mm) ID; 10 ft (3.05 m); nylon	2
1c	157785	FITTING, swivel; 3/4 npt(m) x 3/4 nps(f)	2
1d	113344	FITTING, swivel; 1/2 npt(m) x 3/4 nps(f); (not shown) (use as necessary to adapt 1/2 npt ISO inlet)	1
2	246483	AIR SUPPLY KIT; see page 11 and 309827	1
6	247616	KIT, desiccant dryer; for ISO side; see page 11	1

Part No. 247955, T1 2:1 Package

Ref.	Part	Description	Qty.
1	247956	KIT, fluid supply	1
1a	256200	PUMP, 2:1; see 312766	2
1b	217382	HOSE, fluid; 3/4 npt (mbe); 3/4 in. (19 mm) ID; 10 ft (3.05 m); nylon	2
1c*	113344	FITTING, swivel; 1/2 npt(m) x 3/4 nps(f)	3
1d	113344	FITTING, swivel; 1/2 npt(m) x 3/4 nps(f); (not shown) (use as necessary to adapt 1/2 npt ISO inlet)	1
2	246483	AIR SUPPLY KIT; see page 11 and 309827	1
6	247616	KIT, desiccant dryer; for ISO side; see page 11	1

*Use additional 1/2 NPT x 3/4 NPSF fitting to adapt to 1/2 NPT inlet if necessary.

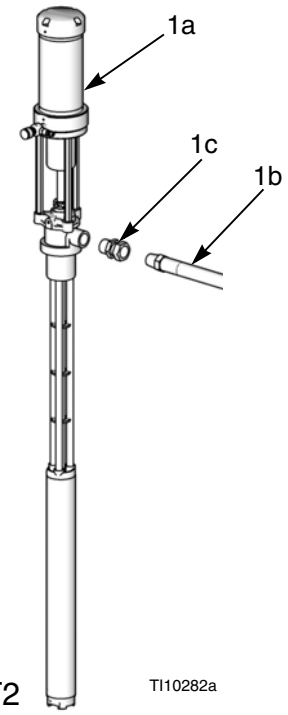

Shown: T2

Part No. 24Z987, SS T3 3:1 Package

Ref.	Part	Description	Qty.
1	26A304	PUMP, transfer, 3:1, T3	2
2	246483	KIT, supply, air (feed pump, gun)	1
3	217382	HOSE, coupled, 10 ft	2
5	157785	FITTING, swivel	2
6	247616	KIT, accessory, desiccant dryer	1

Part No. 25D295, CS T3 3:1 Package

Ref.	Part	Description	Qty.
1	24Z834	PUMP, T3, CS	2
2	246483	KIT, supply, air (feed pump, gun)	1
3	217382	HOSE, coupled, 10 ft	2
5	157785	FITTING, swivel	2

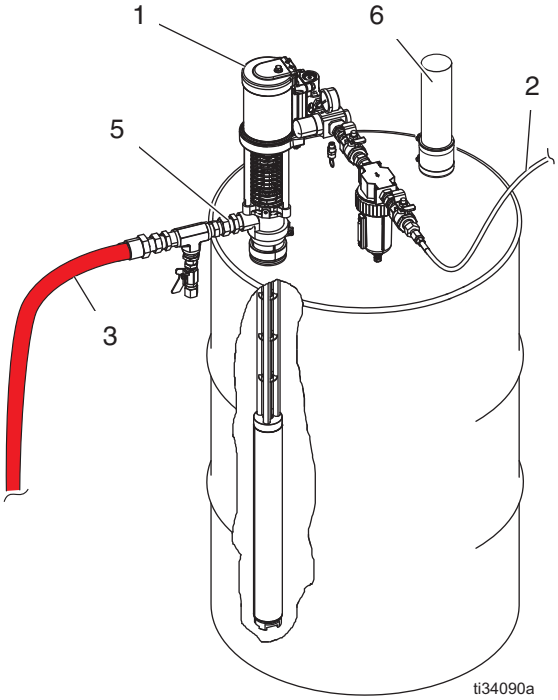

Fluid Supply Kits

Part No. 246481, Husky 515 Kit

Part No. 246482, Husky 716 Kit

Part No. 246676, Husky 1050 Kit

Part No. 246677, Triton 308 Kit (shown)

Ref.	Part	Description	Qty.
101	246366	PUMP KIT, Husky 515; 246481	2
	246367	PUMP KIT, Husky 716; 246482	2
	246368	PUMP KIT, Husky 1050; 246676	2
	246654	PUMP KIT, Triton 308; 246677	2
102	157785	UNION, swivel; 3/4 npt(m) x 3/4 npsm(f); 246481 and 246482	2
	202965	UNION, swivel; 1 in. npt(m) x 3/4 npsm(f); 246676	2
	113344	UNION, swivel; 1/2 npt(m) x 3/4 npsm(f); 246677	2
103	217382	HOSE, fluid; 3/4 npt (mbe); 3/4 in. (19 mm) ID; 10 ft (3.05 m); nylon	2
104	217430	ELBOW, swivel; 90°; 3/8 npt(m) x 1/2 npsm(f); 246677 only	2
105	104969	BUSHING, reducer, 1/2 npt(m) x 3/4 npt(f); use on 1/2 npt ISO inlet hose (not shown)	1

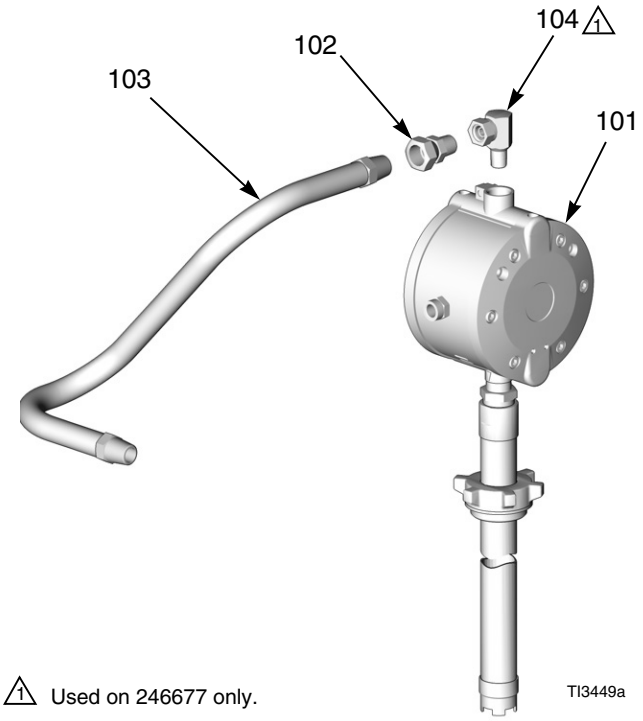

⚠1 Used on 246677 only.

Pump Kits

Part No. 246366, Husky 515 Pump

Ref.	Part	Description	Qty.
201	246484	PUMP, Husky 515; see 308981 and read **CAUTION** below	1
202	246419	RISER TUBE KIT; see page 16	1

⚠ CAUTION

246484 Husky 515 Pump is built specifically for use with isocyanates and is tested with oil. To order replacement parts and repair kits, refer to the Husky 515 parts list in manual 308981.

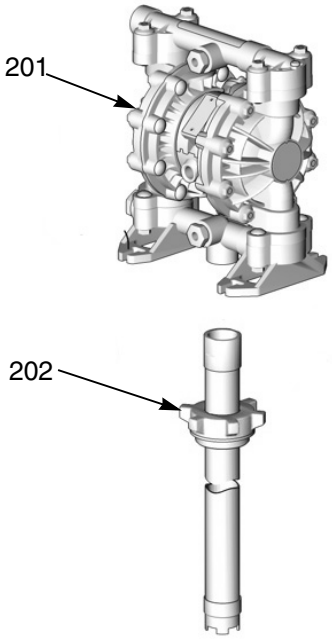

Part No. 246367, Husky 716 Pump

Ref.	Part	Description	Qty.
201	246485	PUMP, Husky 716; see 308981 and read **CAUTION** below	1
202	246419	RISER TUBE KIT; see page 16	1
203	158555	NIPPLE, reducing; 1 in. npt x 3/4 npt	1

⚠ CAUTION

246485 Husky 716 Pump is built specifically for use with isocyanates and is tested with oil. To order replacement parts and repair kits, refer to the Husky 716 parts list in manual 308981.

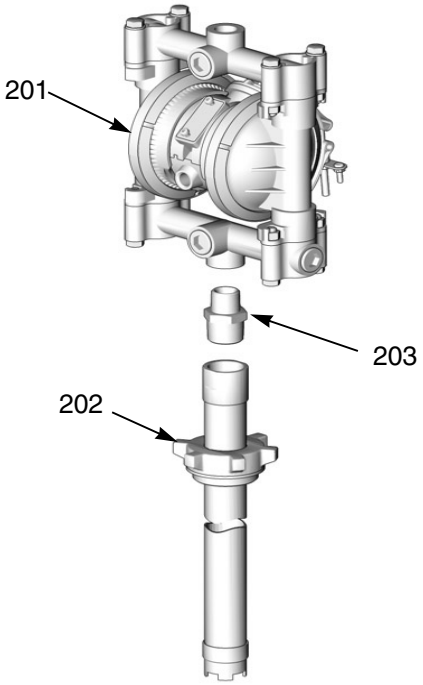

Part No. 246368, Husky 1050 Pump

Ref.	Part	Description	Qty.
201	647673	PUMP, Husky 1050; see 312877 and 313435, and read **CAUTION** below	1
202	246419	RISER TUBE KIT; see page 16	1
203	214961	HOSE, suction; 3/4 npt (mbe); 3/4 in. (19 mm) ID; 6 ft (1.8 m); neoprene	1
204	24C637	KIT, bracket, wall (includes mounting hardware)	1
205	202965	UNION, swivel, pump inlet; 1 in. npt(m) x 3/4 npsm(f)	1
206	107409	ELBOW, swivel, riser tube; 90°; 1 in. npt(m) x 3/4 npsm(f)	1

⚠ CAUTION

647673 Husky 1050 Pump is built specifically for use with isocyanates and is tested with oil. To order replacement parts and repair kits, refer to the Husky 1050 parts list in manual 313435.

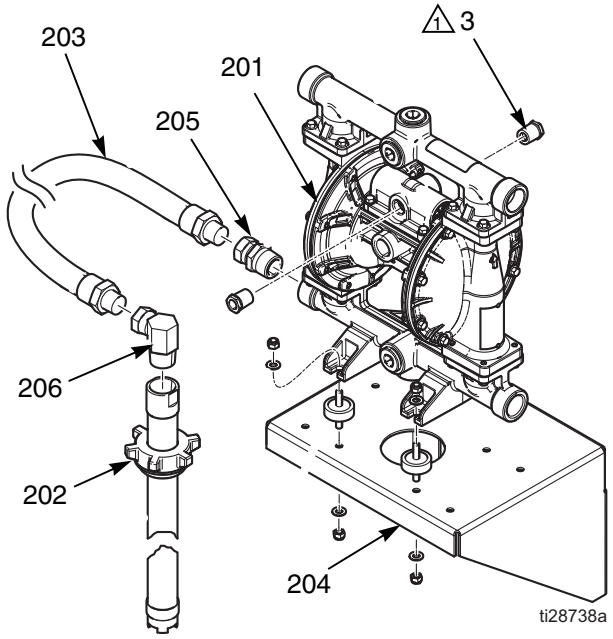

1 See page 11 for description.

Part No. 246654, Triton 308 Pump

Ref.	Part	Description	Qty.
201	233500	PUMP, Triton 308; see 309303	1
202	246419	RISER TUBE KIT; see page 16	1
203	158555	NIPPLE, reducing; 1 in. npt x 3/4 npt	1

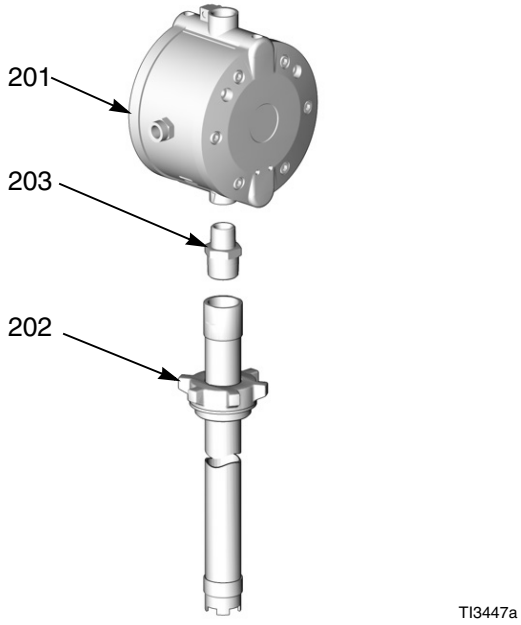

246419 Riser Tube Kit

Ref.	Part	Description	Qty.
301	159101	HOUSING, valve, intake	1
302	156592	TUBE, riser	1
303	106537	GASKET, bung	1
304	15B728	ADAPTER, bung	1
305	15B727	FITTING; 1 in. npt	1
306	15B921	SPACER	1
307	100279	BALL	1
308	159100	RETAINER, ball	1
309	110831	O-RING	1

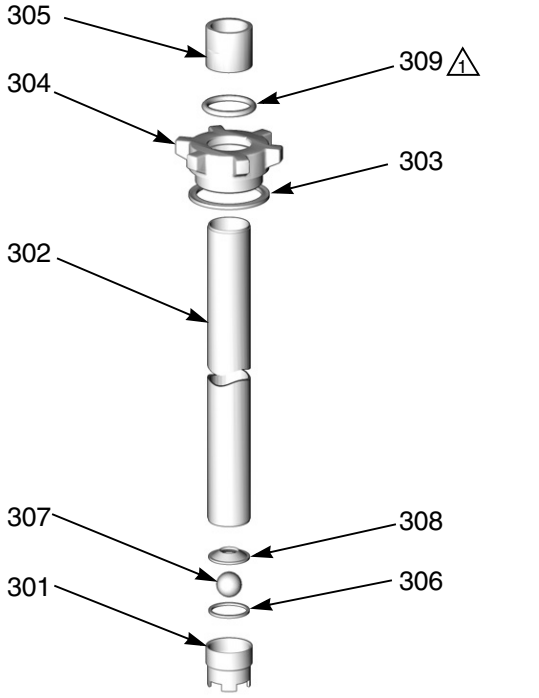

1 Lubricate with 217374 ISO Pump Oil each time you change drums.

Technical Data

Category	Data
Maximum air input pressure	Husky 515: 100 psi (0.7 MPa, 7 bar) Husky 716: 100 psi (0.7 MPa, 7 bar) Husky 1050: 125 psi (0.86 MPa, 8.6 bar) Triton 308: 115 psi (0.8 MPa, 8 bar) T2 2:1 Ratio: 180 psi (1.2 MPa, 12.5 bar) T1 2:1 Ratio: 180 psi (1.2 MPa, 12.5 bar)
Maximum fluid working pressure	Husky 515: 100 psi (0.7 MPa, 7 bar) Husky 716: 100 psi (0.7 MPa, 7 bar) Husky 1050: 125 psi (0.86 MPa, 8.6 bar) Triton 308: 115 psi (0.8 MPa, 8 bar) T2 2:1 Ratio: 405 psi (2.8 MPa, 28 bar) T1 2:1 Ratio: 360 psi (2.5 MPa, 25 bar) T3 3:1 Ratio: 315 psi (2.17 MPa, 21.7 bar)
Wetted parts	Pump: see supplied pump manual Riser tube: carbon steel Fluid hoses: nylon Suction hose (Husky 1050 only): neoprene Fittings: carbon steel

Graco Standard Warranty

Graco warrants all equipment referenced in this document which is manufactured by Graco and bearing its name to be free from defects in material and workmanship on the date of sale to the original purchaser for use. With the exception of any special, extended, or limited warranty published by Graco, Graco will, for a period of twelve months from the date of sale, repair or replace any part of the equipment determined by Graco to be defective. This warranty applies only when the equipment is installed, operated and maintained in accordance with Graco's written recommendations.

This warranty does not cover, and Graco shall not be liable for general wear and tear, or any malfunction, damage or wear caused by faulty installation, misapplication, abrasion, corrosion, inadequate or improper maintenance, negligence, accident, tampering, or substitution of non-Graco component parts. Nor shall Graco be liable for malfunction, damage or wear caused by the incompatibility of Graco equipment with structures, accessories, equipment or materials not supplied by Graco, or the improper design, manufacture, installation, operation or maintenance of structures, accessories, equipment or materials not supplied by Graco.

This warranty is conditioned upon the prepaid return of the equipment claimed to be defective to an authorized Graco distributor for verification of the claimed defect. If the claimed defect is verified, Graco will repair or replace free of charge any defective parts. The equipment will be returned to the original purchaser transportation prepaid. If inspection of the equipment does not disclose any defect in material or workmanship, repairs will be made at a reasonable charge, which charges may include the costs of parts, labor, and transportation.

THIS WARRANTY IS EXCLUSIVE, AND IS IN LIEU OF ANY OTHER WARRANTIES, EXPRESS OR IMPLIED, INCLUDING BUT NOT LIMITED TO WARRANTY OF MERCHANTABILITY OR WARRANTY OF FITNESS FOR A PARTICULAR PURPOSE.

Graco's sole obligation and buyer's sole remedy for any breach of warranty shall be as set forth above. The buyer agrees that no other remedy (including, but not limited to, incidental or consequential damages for lost profits, lost sales, injury to person or property, or any other incidental or consequential loss) shall be available. Any action for breach of warranty must be brought within two (2) years of the date of sale.

GRACO MAKES NO WARRANTY, AND DISCLAIMS ALL IMPLIED WARRANTIES OF MERCHANTABILITY AND FITNESS FOR A PARTICULAR PURPOSE, IN CONNECTION WITH ACCESSORIES, EQUIPMENT, MATERIALS OR COMPONENTS SOLD BUT NOT MANUFACTURED BY GRACO. These items sold, but not manufactured by Graco (such as electric motors, switches, hose, etc.), are subject to the warranty, if any, of their manufacturer. Graco will provide purchaser with reasonable assistance in making any claim for breach of these warranties.

In no event will Graco be liable for indirect, incidental, special or consequential damages resulting from Graco supplying equipment hereunder, or the furnishing, performance, or use of any products or other goods sold hereto, whether due to a breach of contract, breach of warranty, the negligence of Graco, or otherwise.

FOR GRACO CANADA CUSTOMERS
The Parties acknowledge that they have required that the present document, as well as all documents, notices and legal proceedings entered into, given or instituted pursuant hereto or relating directly or indirectly hereto, be drawn up in English. Les parties reconnaissent avoir convenu que la rédaction du présente document sera en Anglais, ainsi que tous documents, avis et procédures judiciaires exécutés, donnés ou intentés, à la suite de ou en rapport, directement ou indirectement, avec les procédures concernées.

Graco Information

For the latest information about Graco products, visit www.graco.com.

For patent information, see www.graco.com/patents.

TO PLACE AN ORDER, contact your Graco distributor or call to identify the nearest distributor.
Phone: 612-623-6921 **or Toll Free:** 1-800-328-0211 **Fax:** 612-378-3505

All written and visual data contained in this document reflects the latest product information available at the time of publication. Graco reserves the right to make changes at any time without notice.

Original instructions. This manual contains English. MM 309815

Graco Headquarters: Minneapolis
International Offices: Belgium, China, Japan, Korea

GRACO INC. P.O. BOX 1441 MINNEAPOLIS, MN 55440-1441
Copyright 2003, Graco Inc. is registered to ISO 9001
www.graco.com
Revision T, October 2018